STGP10NB60SFP

16 A, 600 V, low drop IGBT

Features

- Low on-voltage drop ($V_{CE(sat)}$)
- High current capability

Applications

- Light dimmer
- Static relays
- Motor drive

Description

This IGBT utilizes the advanced PowerMESH™ process featuring extremely low on-state voltage drop in low-frequency working conditions (up to 1 kHz).

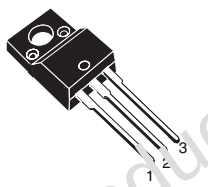

TO-220FP

Figure 1. Internal schematic diagram

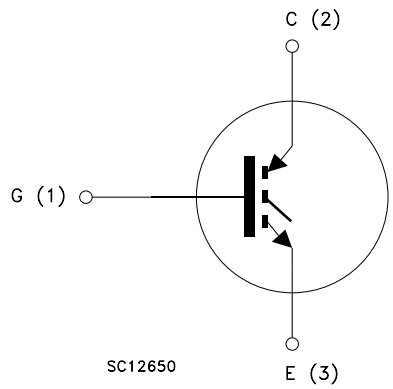

Table 1. Device summary

Order codes	Marking	Package	Packaging
STGP10NB60SFP	GP10NB60SFP	TO-220-FP	Tube

Obsolete Product(s) - Obsolete Product(s)

1 Electrical ratings

Table 2. Absolute maximum ratings

Symbol	Parameter	Value	Unit
V_{CES}	Collector-emitter voltage (V_{GE} = 0)	600	V
I_C(1)	Continuous collector current at T_C = 25 °C	23	A
I_C(1)	Continuous collector current at T_C = 100 °C	12	A
I_{CL} (2)	Turn-off latching current	20	A
I_{CP} (3)	Pulsed collector current	80	A
V_{GE}	Gate-emitter voltage	±20	V
V_{ISO}	Isolation withstand voltage (RMS) from all three leads to external hea sink (t=1 s; T_C = 25 °C)	2500	V
P_{TOT}	Total dissipation at T_C = 25 °C	25	W
T_j	Operating junction temperature	– 55 to 150	°C

1. Calculated according to the iterative formula

$$I_C(T_C) = \frac{T_{j(max)} - T_C}{R_{thj-c} \times V_{CE(sat)(max)}(T_{j(max)}, I_C(T_C))}$$

2. Vclamp = 80% of V_{CES}, T_j=150 °C, R_G=1kΩ, V_{GE}=15 V
3. Pulse width limited by maximum junction temperature and turn-off within RBSOA

Table 3. Thermal data

Symbol	Parameter	Value	Unit
$R_{thj-case}$	Thermal resistance junction-case	5	°C/W
$R_{thj-amb}$	Thermal resistance junction-ambient	62.5	°C/W

Obsolete Product(s) - Obsolete Product(s)

2 Electrical characteristics

(T_j =25 °C unless otherwise specified)

Table 4. Static

Symbol	Parameter	Test conditions	Min.	Typ.	Max.	Unit
$V_{(BR)CES}$	Collector-emitter breakdown voltage (V_{GE}= 0)	I_C= 250 µA	600			V
$V_{(BR)ECS}$	Emitter-collector breakdown voltage (V_{GE}= 0)	I_C= 1 mA	20			V
I_{GES}	Gate-emitter leakage current (V_{CE} = 0)	V_{GE}= ±20 V			±100	nA
I_{CES}	Collector cut-off current (V_{GE} = 0)	V_{CE}= 600 V V_{CE}= 600 V, T_j= 125 °C			10 100	µA µA
$V_{GE(th)}$	Gate threshold voltage	V_{CE}= V_{GE}, I_C= 250 µA	2.5		5	V
$V_{CE(sat)}$	Collector-emitter saturation voltage	V_{GE}= 15 V, I_C= 5 A V_{GE}= 15 V, I_C= 10 A V_{GE}= 15 V, I_C= 10 A, T_j= 125 °C		1.15 1.35 1.25	1.75	V
g_{fs} (1)	Forward transconductance	V_{CE} = 15 V , I_C = 10 A	5			S

1. Pulsed: Pulse duration = 300 µs, duty cycle 1.5%

Table 5. Dynamic

Symbol	Parameter	Test conditions	Min.	Typ.	Max.	Unit
C_{ies} C_{oes} C_{res}	Input capacitance Output capacitance Reverse transfer capacitance	V_{CE} = 25 V, f = 1 MHz, V_{GE}= 0	-	610 65 12	-	pF pF pF
Q_g	Total gate charge	V_{CE} = 400 V, I_C = 10 A, V_{GE} = 15 V *(see Figure 17)*	-	33	-	nC

Obsolete Product(s) - Obsolete Product(s)

Table 6. Switching on/off (inductive load)

Symbol	Parameter	Test conditions	Min.	Typ.	Max.	Unit
$t_{d(on)}$ t_r $(di/dt)_{on}$	Turn-on delay time Current rise time Turn-on current slope	V_{CC} = 480 V, I_C = 10 A R_G= 1 kΩ, V_{GE}= 15 V *(see Figure 16)*	-	0.7 0.46 8	-	µs µs A/µs
$t_r(V_{off})$ $t_d(_{off})$ t_f	Off voltage rise time Turn-off delay time Current fall time	V_{CC} = 480 V, I_C = 10 A R_G= 1 kΩ, V_{GE}= 15 V *(see Figure 16)*	-	2.2 1.2 1.2	-	µs
$t_r(V_{off})$ $t_d(_{off})$ t_f	Off voltage rise time Turn-off delay time Current fall time	V_{CC} = 480 V, I_C = 10 A R_G= 1 kΩ, V_{GE}= 15 V, T_j= 125 °C *(see Figure 16)*	-	3.8 1.2 1.9	-	µs

Table 7. Switching energy (inductive load)

Symbol	Parameter	Test conditions	Min.	Typ.	Max.	Unit
Eon (1) E_{off} (2) E_{ts}	Turn-on switching losses Turn-off switching losses Total switching losses	V_{CC} = 480 V, I_C = 10 A R_G= 1 kΩ, V_{GE}= 15 V *(see Figure 16)*	-	0.6 5 5.6	-	µJ µJ µJ
E_{off} (2)	Turn-off switching losses	V_{CC} = 480 V, I_C = 10 A R_G= 1 kΩ, V_{GE}= 15 V, T_j= 125 °C *(see Figure 16)*	-	8	-	µJ

1. Eon is the turn-on losses when a typical diode is used in the test circuit. If the IGBT is offered in a package with a co-pack diode, the co-pack diode is used as external diode. IGBTs and diode are at the same temperature (25°C and 125°C).
2. Turn-off losses include also the tail of the collector current.

Obsolete Product(s) - Obsolete Product(s)

2.1 Electrical characteristics (curves)

Figure 2. Output characteristics

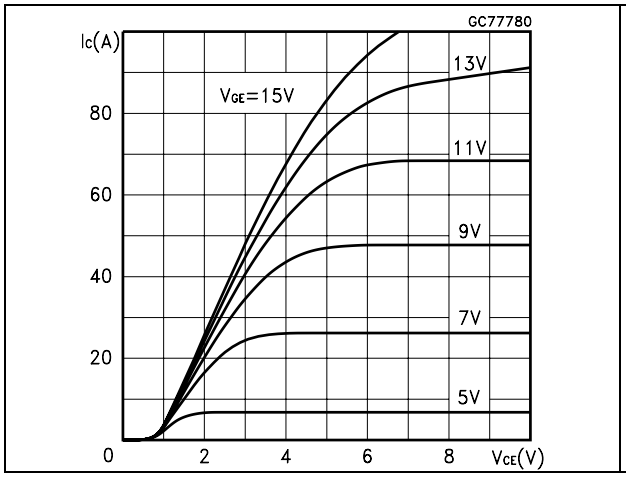

Figure 3. Transfer characteristics

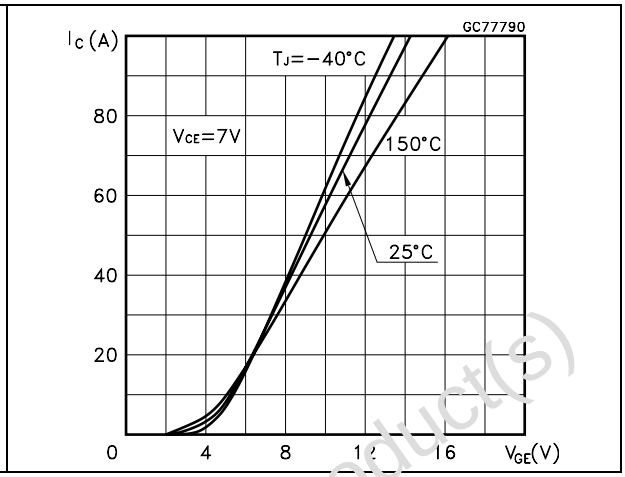

Figure 4. Transconductance

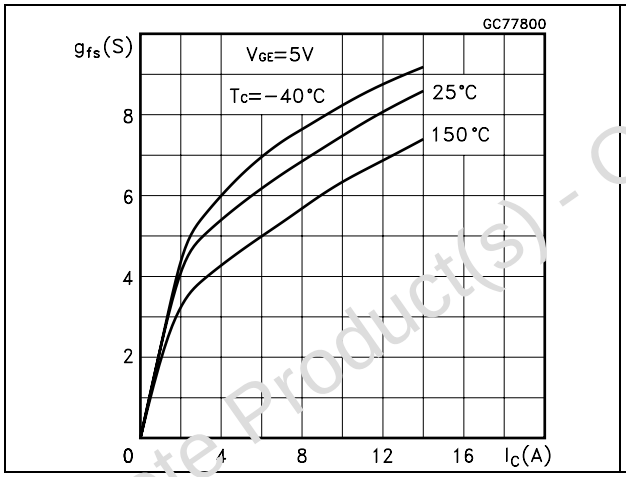

Figure 5. Collector-emitter on voltage vs temperature

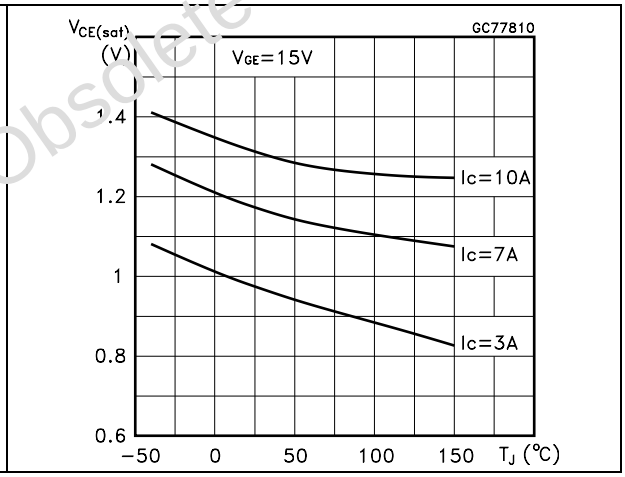

Figure 6. Collector-emitter on voltage vs collector current

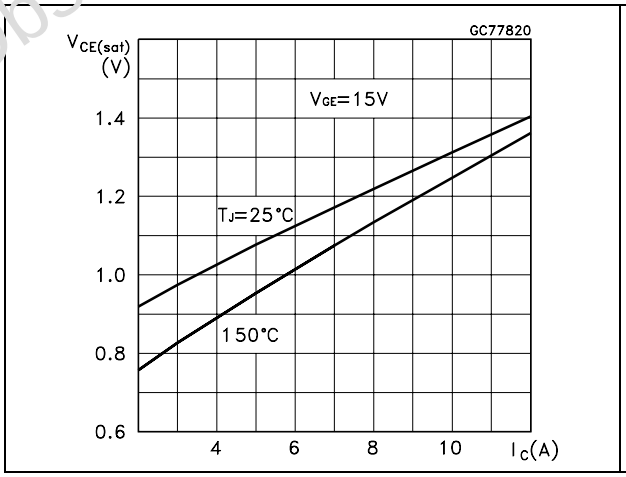

Figure 7. Normalized gate threshold vs temperature

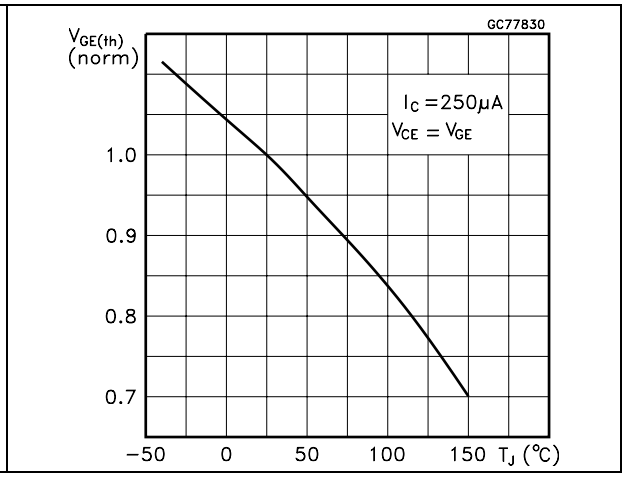

Obsolete Product(s) - Obsolete Product(s)

Figure 8. Normalized breakdown voltage vs temperature

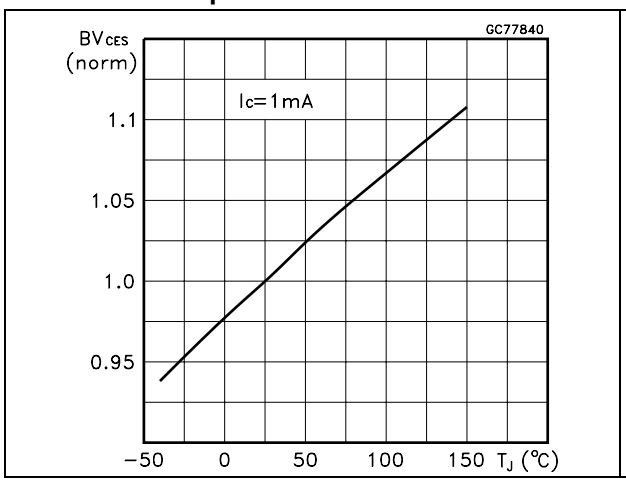

Figure 9. Gate charge vs gate-emitter voltage

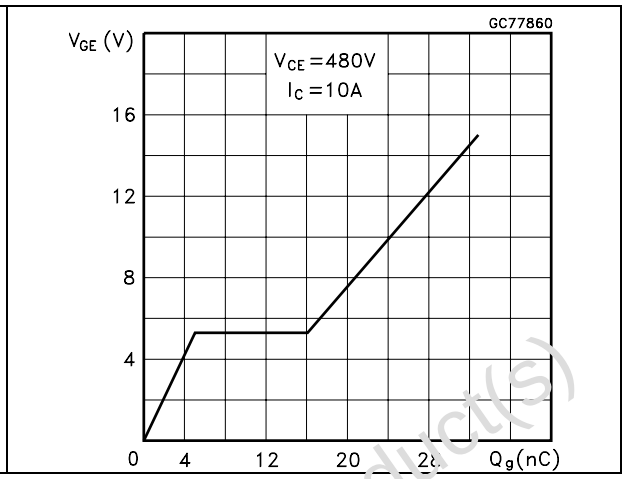

Figure 10. Capacitance variations

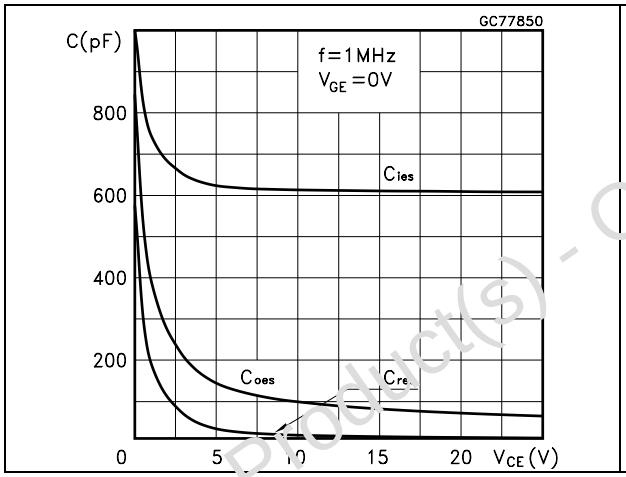

Figure 11. Switching losses vs temperature

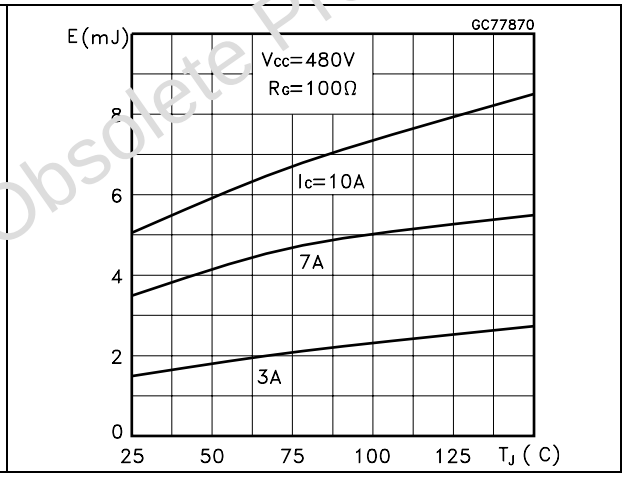

Figure 12. Switching losses vs gate resistance

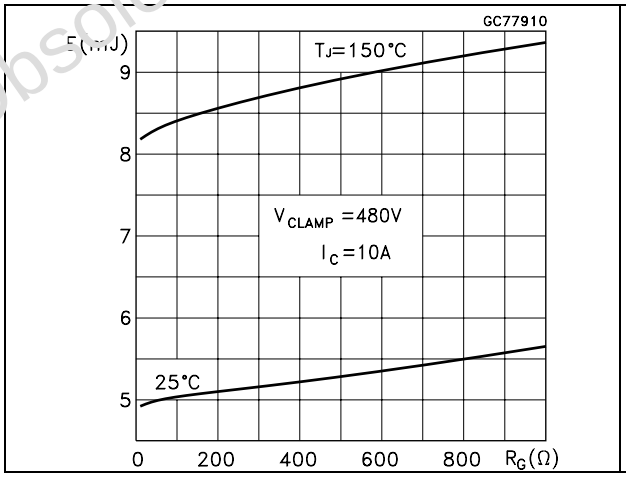

Figure 13. Switching losses vs collector current

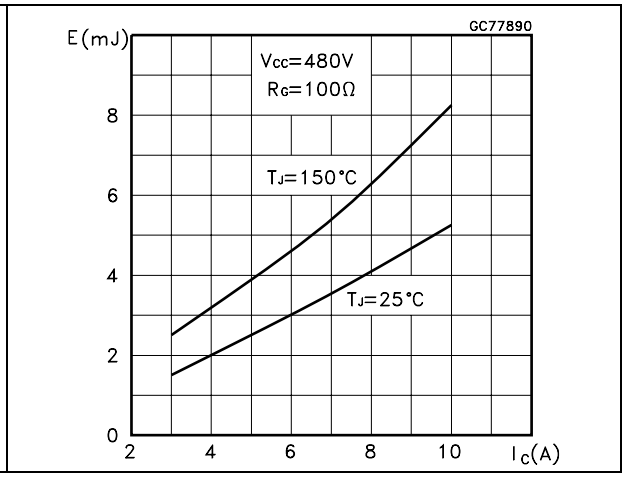

Obsolete Product(s) - Obsolete Product(s)

Figure 14. Thermal impedance

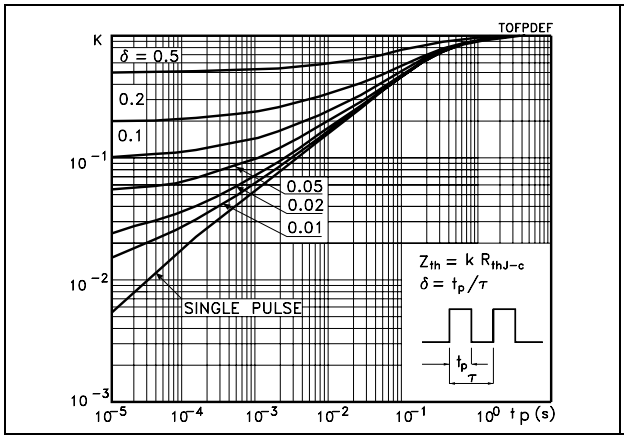

Figure 15. Turn-off SOA

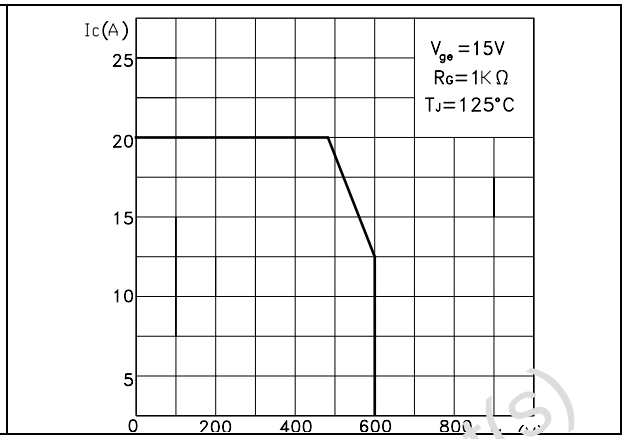

Obsolete Product(s) - Obsolete Product(s)

3 Test circuits

Figure 16. Test circuit for inductive load switching

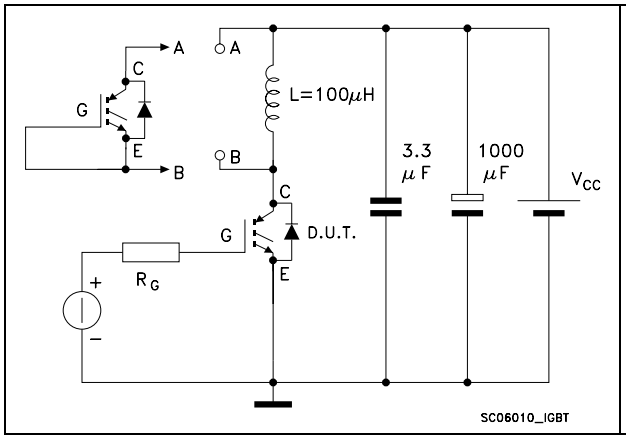

Figure 17. Gate charge test circuit

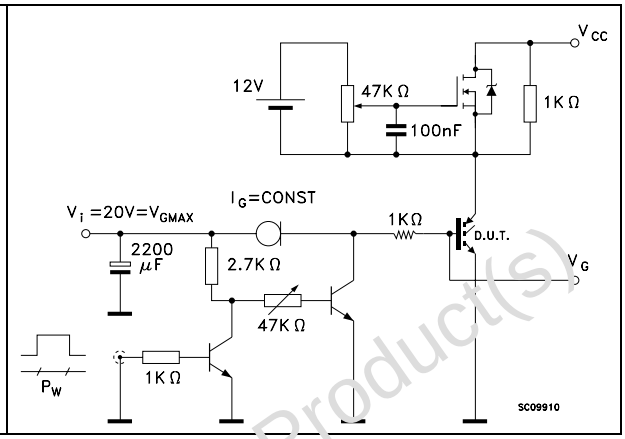

Figure 18. Switching waveforms

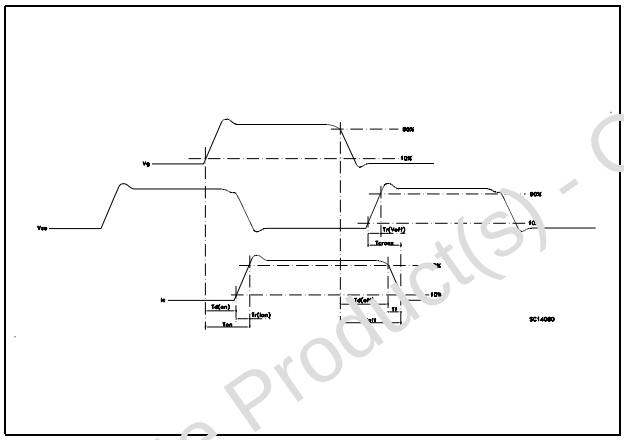

Obsolete Product(s) - Obsolete Product(s)

4 Package mechanical data

In order to meet environmental requirements, ST offers these devices in different grades of ECOPACK® packages, depending on their level of environmental compliance. ECOPACK® specifications, grade definitions and product status are available at: www.st.com. ECOPACK is an ST trademark.

Obsolete Product(s) - Obsolete Product(s)

Table 8. TO-220FP mechanical data

Dim.	mm		
	Min.	Typ.	Max.
A	4.4		4.6
B	2.5		2.7
D	2.5		2.75
E	0.45		0.7
F	0.75		1
F1	1.15		1.70
F2	1.15		1.70
G	4.95		5.2
G1	2.4		2.7
H	10		10.4
L2		16	
L3	28.6		30.6
L4	9.8		10.6
L5	2.9		3.6
L6	15.9		16.4
L7	9		9.3
Dia	3		3.2

Figure 19. TO-220FP drawing

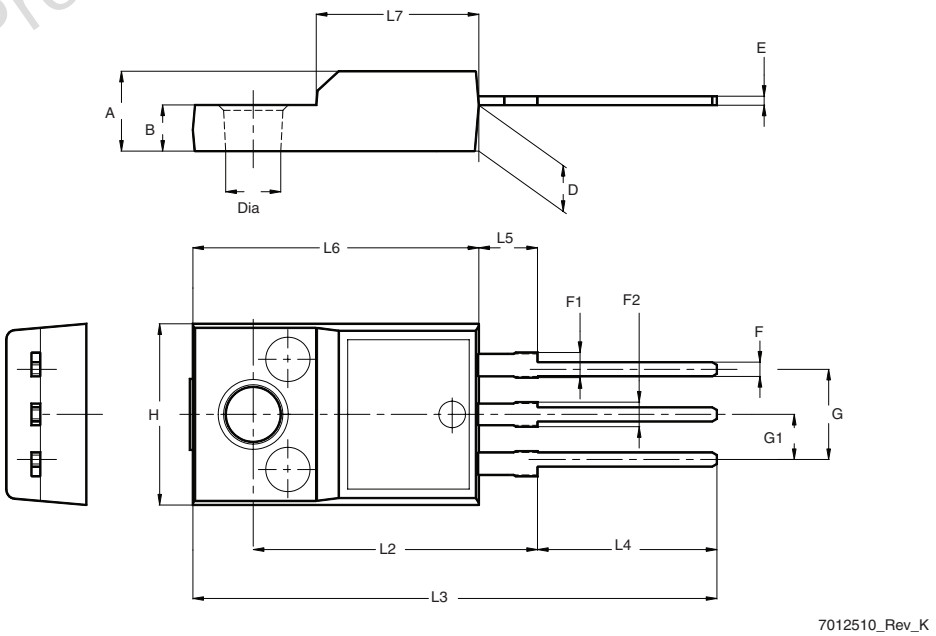

Obsolete Product(s) - Obsolete Product(s)

5 Revision history

Table 9. Document revision history

Date	Revision	Changes
03-Oct-2011	1	New release.

Obsolete Product(s) - Obsolete Product(s)

Please Read Carefully:

Information in this document is provided solely in connection with ST products. STMicroelectronics NV and its subsidiaries ("ST") reserve the right to make changes, corrections, modifications or improvements, to this document, and the products and services described herein at any time, without notice.

All ST products are sold pursuant to ST's terms and conditions of sale.

Purchasers are solely responsible for the choice, selection and use of the ST products and services described herein, and ST assumes no liability whatsoever relating to the choice, selection or use of the ST products and services described herein.

No license, express or implied, by estoppel or otherwise, to any intellectual property rights is granted under this document. If any part of this document refers to any third party products or services it shall not be deemed a license grant by ST for the use of such third party products or services, or any intellectual property contained therein or considered as a warranty covering the use in any manner whatsoever of such third party products or services or any intellectual property contained therein.

UNLESS OTHERWISE SET FORTH IN ST'S TERMS AND CONDITIONS OF SALE ST DISCLAIMS ANY EXPRESS OR IMPLIED WARRANTY WITH RESPECT TO THE USE AND/OR SALE OF ST PRODUCTS INCLUDING WITHOUT LIMITATION IMPLIED WARRANTIES OF MERCHANTABILITY, FITNESS FOR A PARTICULAR PURPOSE (AND THEIR EQUIVALENTS UNDER THE LAWS OF ANY JURISDICTION), OR INFRINGEMENT OF ANY PATENT, COPYRIGHT OR OTHER INTELLECTUAL PROPERTY RIGHT.

UNLESS EXPRESSLY APPROVED IN WRITING BY TWO AUTHORIZED ST REPRESENTATIVES, ST PRODUCTS ARE NOT RECOMMENDED, AUTHORIZED OR WARRANTED FOR USE IN MILITARY, AIR CRAFT, SPACE, LIFE SAVING, OR LIFE SUSTAINING APPLICATIONS, NOR IN PRODUCTS OR SYSTEMS WHERE FAILURE OR MALFUNCTION MAY RESULT IN PERSONAL INJURY, DEATH, OR SEVERE PROPERTY OR ENVIRONMENTAL DAMAGE. ST PRODUCTS WHICH ARE NOT SPECIFIED AS "AUTOMOTIVE GRADE" MAY ONLY BE USED IN AUTOMOTIVE APPLICATIONS AT USER'S OWN RISK.

Resale of ST products with provisions different from the statements and/or technical features set forth in this document shall immediately void any warranty granted by ST for the ST product or service described herein and shall not create or extend in any manner whatsoever, any liability of ST.

ST and the ST logo are trademarks or registered trademarks of ST in various countries.

Information in this document supersedes and replaces all information previously supplied.

The ST logo is a registered trademark of STMicroelectronics. All other names are the property of their respective owners.

© 2011 STMicroelectronics - All rights reserved

STMicroelectronics group of companies

Australia - Belgium - Brazil - Canada - China - Czech Republic - Finland - France - Germany - Hong Kong - India - Israel - Italy - Japan - Malaysia - Malta - Morocco - Philippines - Singapore - Spain - Sweden - Switzerland - United Kingdom - United States of America

www.st.com

Obsolete Product(s) - Obsolete Product(s)